STRENGTHENING OF MASONRY VAULTED STRUCTURES (DVD PROCEEDINGS)

Martin Zlámal
Brno University of Technology, Faculty of Civil Engineering, Czech Republic, zlamal.m@fce.vutbr.cz

1st Petr Štěpánek
Brno University of Technology, Faculty of Civil Engineering, Czech Republic, stepanek.p@fce.vutbr.cz

Summary

Civil engineering is already developed as a field of knowledge throughout centuries. All over the world exists historical buildings and construction which become representative examples and from whose structural elements we profit up to the present day. No always are indeed in such condition, in order to been possible theirs next functioning without outer interventions.

One from the methods for maintenance of these structures, but also for improvement of new masonry construction behaviour is additional strengthening by nonprestressed reinforcement.

Performed experiments on additionally strengthened vaults with metallic helical reinforcement and nonmetallic composite glass reinforcement (GFRP) proved expressive influence on carrying - capacity of masonry vaults. From the experiments is evident influence of the reinforcement on load bearing capacity of the structure, namely in the case of concentrate loading, asymmetrically loading or in the case of the damaged structures, i.e. cracks, degraded materials, overloading or support movement. In the case of undamaged, uniformly loaded structures without cracks is influence of this type additionally strengthening insignificant. Method of the additional strengthening of masonry structures has its advantage especially in minimum intervention into construction and in its simplicity of the application.

Keywords: bridges, GFRP, masonry, mathematical model, backfill, strengthening, vault.

1 Introduction

Masonry continues to be popular because of its relative simplicity of application in the technical practice. Indeed, for a new use of structural masonry reasonable constructional rules are required, because conventional approach based on the experience is unacceptable nowadays. In addition, most methods of carrying capacity assessment and of strengthening for the existing masonry construction are increasingly based on analyses of mathematical simulation and appropriate (linear and nonlinear) computational models. One method of load-bearing elements strengthening is application of additional external reinforcement into chases in masonry on bottom side of vaults, which will provide stiffening and increasing of load carrying capacity of the individual load-bearing elements. This paper is based on the experiments in the field of masonry structures strengthening that were performed on Faculty of Civil Engineering Brno University of Technology.

In this paper are presented the results of the load tests of masonry vaults strengthened with the metallic helical reinforcement system Helifix and with non-metallic glass reinforcement (GFRP) (**Fig. 1**). The aim of this work is to document possibilities of the use of the additional reinforcement for the strengthening of masonry structures loaded with the interaction of a normal force and a bending moment and to verify experimentally the behaviour of specially shaped profiles of the HeliBar reinforcement and the HeliBond grout in masonry, respective glass reinforcement (GFRP) and the Sikadur grout.

Similar test on additionally strengthened vaulted structures were performed at a Transport Research Laboratory in London. These tests were performed on three layers masonry bridge with span 5 m strengthened by additional reinforcement HeliBar [1].

The method of additionally inserted non-prestressed reinforcement allows additional strengthening of masonry structures without a necessity of large intervention into vaults especially in case of external application. This system is capable redistributing newly originated stresses from load that act on a strengthened construction. The aim of reinforcement is to restrict the development of existing cracks and eliminate possibly an origin of the new ones, and to improve load-bearing capacity of vaulted masonry constructions.

Fig. 1 Shape of HeliBar and wrapped surface GFRP

2 Description of experiments

Within experimental parts of the project three sets of masonry vaults with for various loading types were manufactured. For the distinction of individual vaults are used notation jKi, where „j" corresponds to series number (1-3) and „i" to the strengthening method (1-3). The vaults were symmetrically loaded in ½ of the span - 1.series (j=1), asymmetrically in ¼ of the span - 2.series and symmetrically in both quarters of the span - 3.series (j=3) (**Fig. 2**). Each series consists of three vaults: non-strengthened one – comparative (i=1), a vault reinforced in two chases (i=2) and a vault reinforced in three chases (i=3).

The vaults were bricked up from full burnt bricks on lime-cement mortar of the width 890 mm, span 2600 mm, deflection 750 mm and radius 1500 mm. Into every reinforcing chases were embedded 2 bars. Previous experiments were performed with reinforcement HeliBar of special helical shape of diameter 8 mm. For verification of behaviour on another's type of reinforcement was selected glass armature of diameter 6 mm and used only unsymmetrical loading in ¼ of the span (2.series) [2],[3],[4].

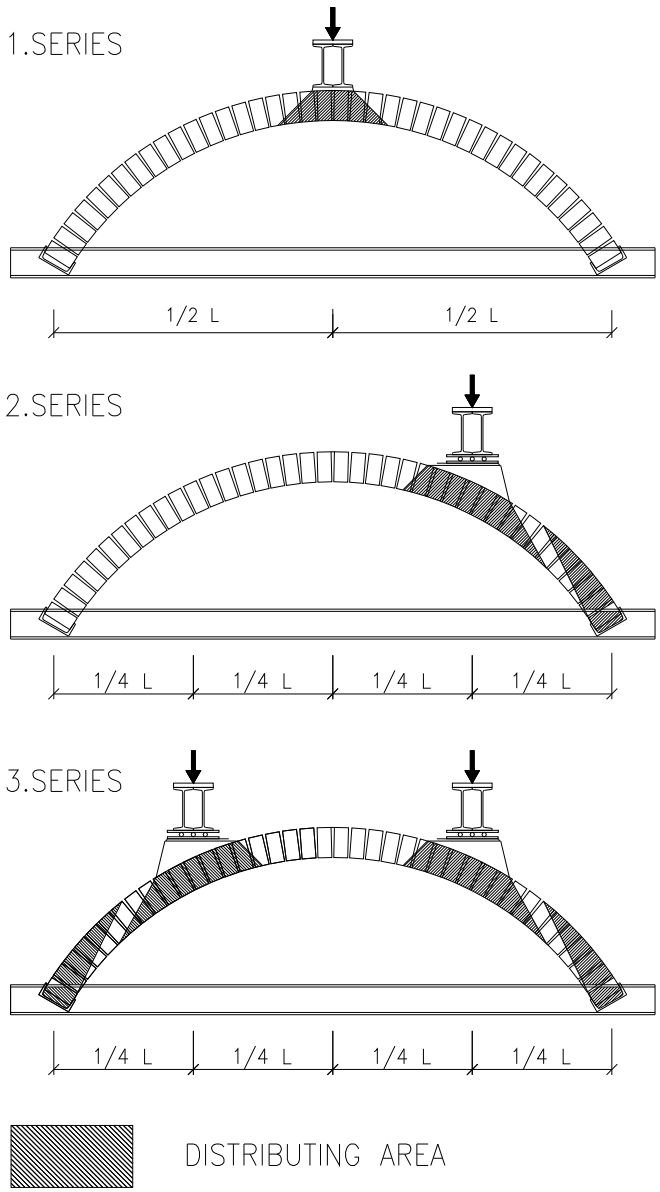

Fig. 2 Loading schemes of vaults and distribution of load in vaults

For the last part of experiments was selected dynamical testing of the vaults. These tests were performed on vaults loaded only in ¼ of the span (2.series – **Fig. 2**), because of maximum influence of additionally reinforcement on final load bearing capacity of the vaults. This last series of vaults were strengthened only with glass reinforcement GFRP. Dynamical loading was initialized by dynamical hydraulic press and deformation of the structure was read by inductive displacement transducers (**Fig. 3**).

Fig. 3 Set-up of the experiment for the dynamical tested vaults loaded in ¼ of the span

3 Interpretation of test results - statical test

From the comparison of the load-bearing capacity of the individual vaults in the series results that essential growth of the load-bearing capacity was achieved especially in the case of 1st series and 2nd series of the vaults, namely more than eight multiple growth. This growing of carrying-capacity can be watch for both cases of reinforcement – helical metallic and glass nonmetallic. It was related to the vaults stressed by either concentrated or one-sided load, at which the vaults were loaded by the interaction of normal forces and bending moments. That's why was on basis of previous experiments [2],[3] select unsymmetrical loading in ¼ of the span for vaults strengthened with glass reinforcement (**Fig. 4**). In the case of 3rd series the experiments did not prove the effects of strengthening by additionally inserted reinforcement on the vaults load-bearing capacity; no effects of reinforcement demonstrated themselves because the vaults were mainly compressed. The result values of the loading and corresponding deformations for all series of vaults strengthened with metallic reinforcement are presented in [2],[3],[4].

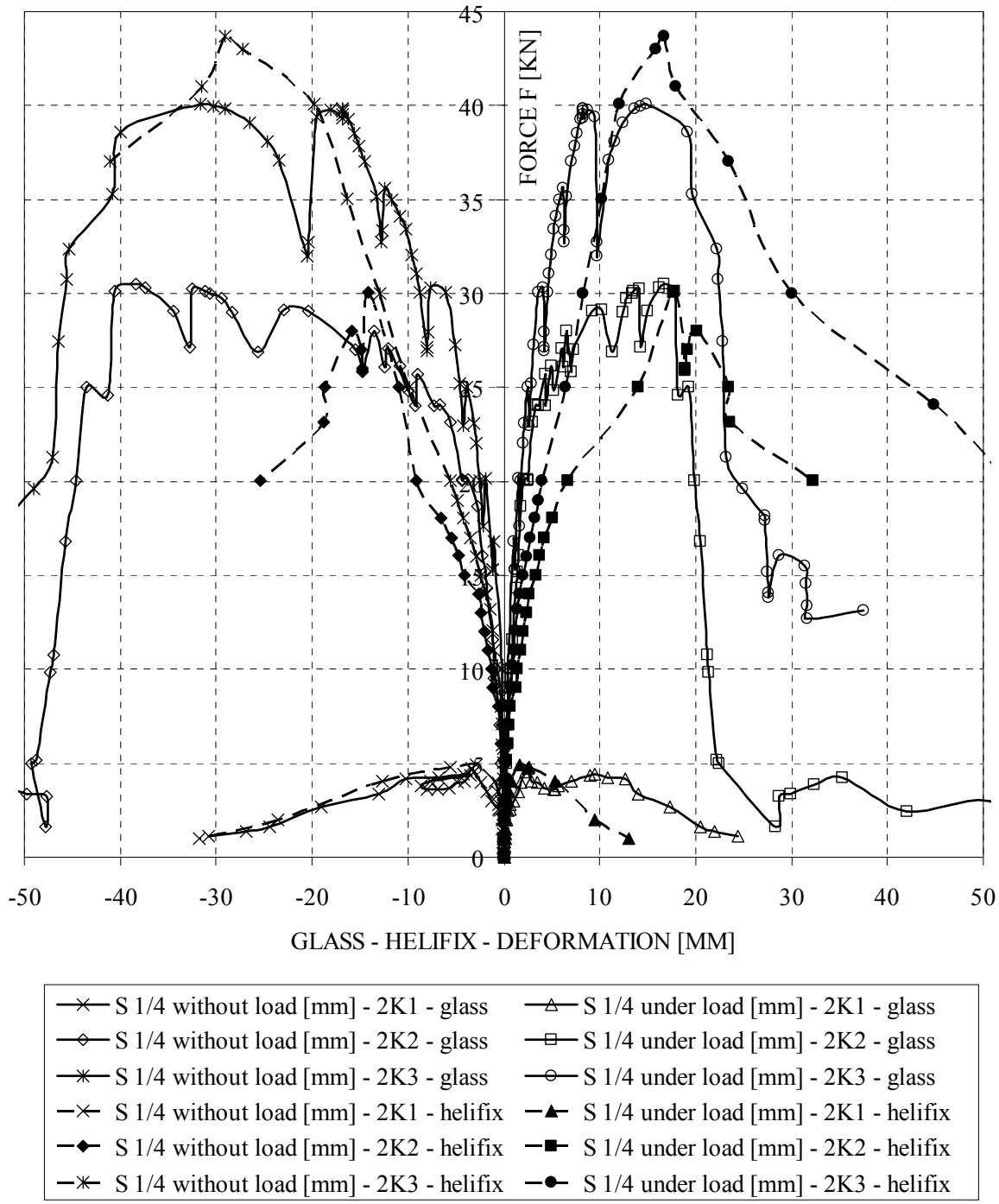

Fig. 4 Comparison of deformations on vaults loaded in ¼ of the span strengthened with GFRP and metallic helical reinforcement – statical test

4 Interpretation of test results - dynamical test

Dynamical tests were performed on vaults loaded asymmetrically in 1/4 of the span and reinforced only with glass reinforcement (GFRP). From results of first dynamical tests is again visible increasing of load-bearing capacity of reinforced vaults (2K2, 2K3) compared to vault unreinforced (2K1) (**Fig. 5**).

But low set of tested specimen prohibited comparison with test data from statical experiments and it also in connection with big nonhomogeneity of masonry constructions. As well a fracture mode, failure of vault by opening of tension cracks in bed joint, is not uniform and position of crack can influence final load bearing capacity. Especially load-bearing capacity of unreinforced vault loaded by dynamical loading is higher in comparison with statical examination which can be incurred especially by nonhomogeneity in masonry. Strengthened vaults can be partially compared by relation of their load-bearing capacity. Ratio of load-bearing capacity of dynamically loaded vaults and statically loaded vaults (F_D/F_S – dynamical coefficient) with two reinforcing chases is 0,633 (**Fig. 6**) and with three reinforcing chases is 0,637 (**Fig. 7**). Comparison is performed for deformation 3 mm.

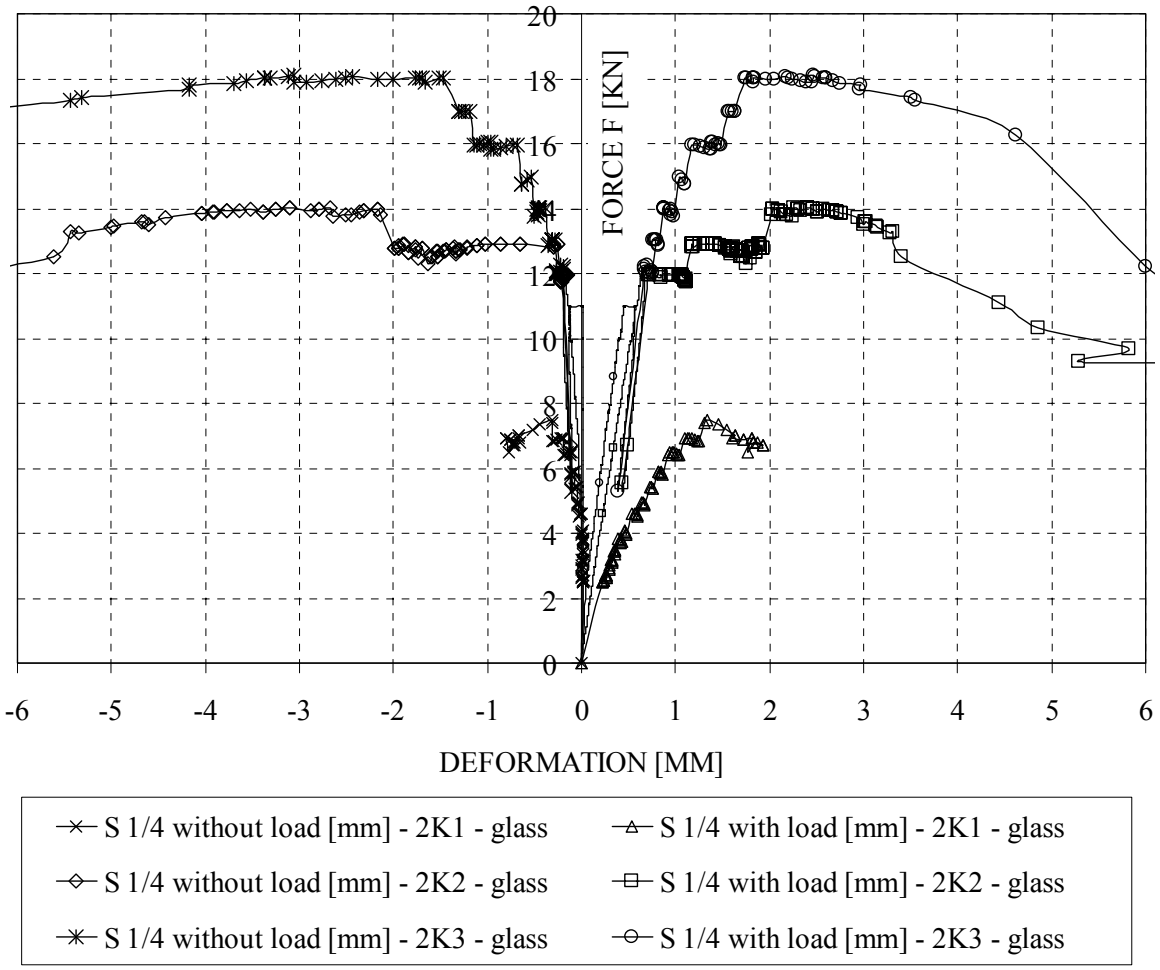

Fig. 5 Comparison of deformations on vaults loaded in ¼ of the span strengthened with GFRP reinforcement – dynamical test

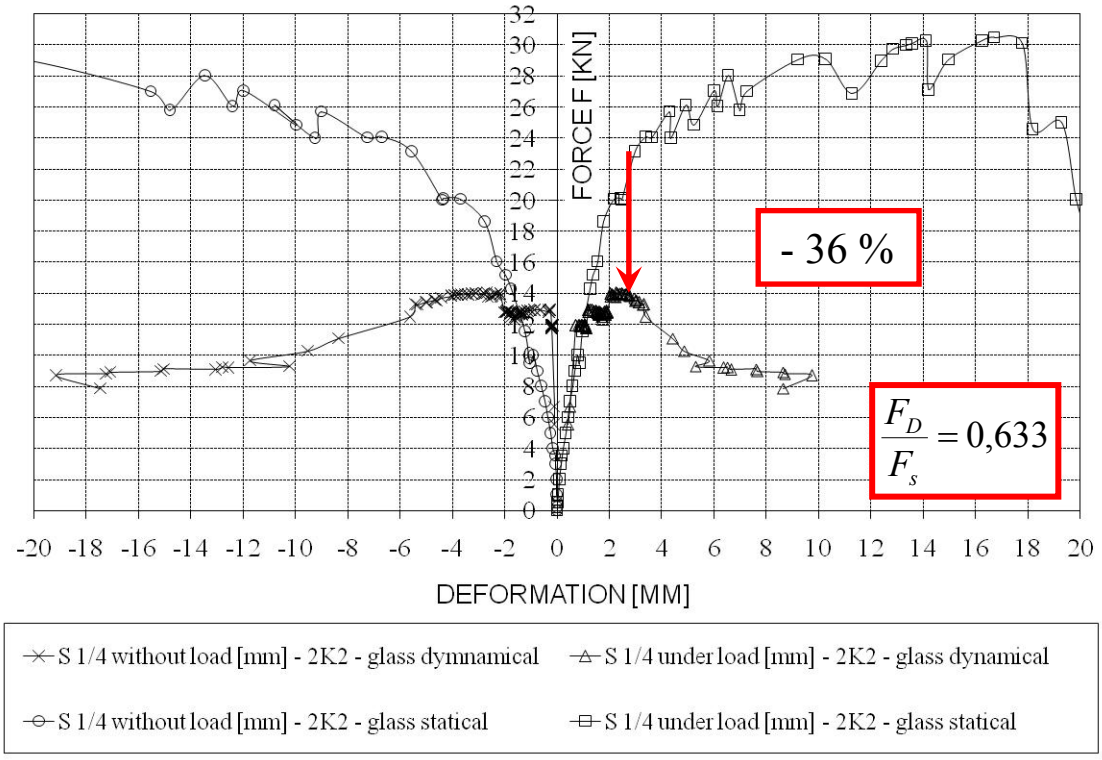

Fig. 6 Comparison of statical and dynamical tests on vaults strengthened by glass reinforcement with two chases

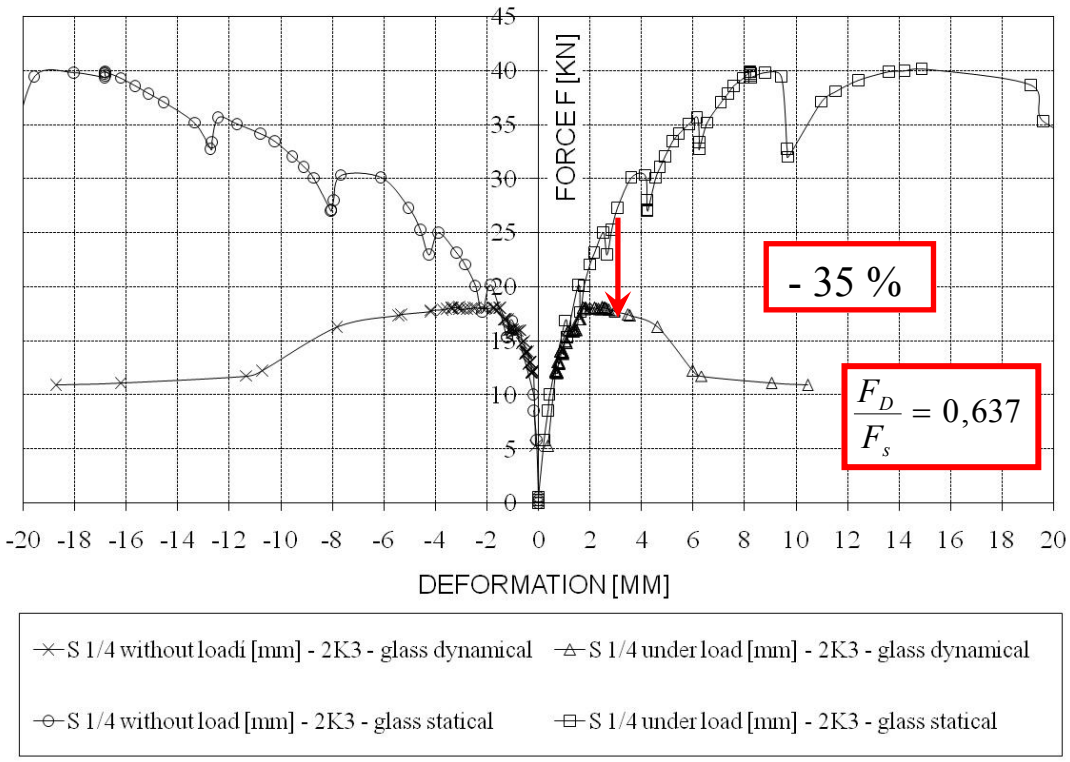

Fig. 7 Comparison of statical and dynamical tests on vaults strengthened by glass reinforcement with three chases

5 Mathematical model in program ATENA

Several attempts have been made to categorise computational modelling frameworks for structural masonry, where it's inherent discontinuous nature (unit, joint, interface) needs to be recognised. Perhaps the most appropriate categorisation comes from the "Delft School" (Rots [5] or Lourenço [6]).

From these theoretical studies result conclusion that the most convenient model for describing orthotropic non-continuous character of masonry is a micro-model and was used for modelling in programme Atena which is determined for non-linear analysis on the base of FEM method and has specially designed tools for computation simulation of the composite materials behaviour. The micro-modelling can describe not only the materials characteristic of individual materials (bricks, mortar), but also their co-acting that is in the mathematical model of masonry considered by 2D contact among the materials. This contact task describes in the best way the behaviour of masonry on the boundary of the masonry units and mortar. A disadvantage of the micro-modelling is its high time-consuming of computation and extensive number of the physically-mechanical properties to be determined for the material behaviour description and for the contact behaviour description among individual materials.

For the mathematical model of masonry units was selected, optionally, 3D Concrete [7], i.e. brittle-plastic material with linear compressive area, for the mortar was used optioned 3D non-linear concrete [7], i.e. brittle-plastic material with linear compressive area, and for description of contact behaviour was used 2D contact [7]. This model of a contact in Atena is based on a model of the dry friction (Mohr-Coulomb) defined by the shear cohesion c and by the friction factor φ. Maximum shearing stress is restricted by a linear relation

$$\tau = tg\varphi \cdot \sigma + c \tag{1}$$

where σ is a magnitude of the contacting pressure stress (positive value). The contact task is extended in addition by limited damage of the contact by a tension f_t.

For reinforcement model is in the calculating Atena program used 1D Reinforcement model [7] which is unfortunately unable in 2D model precisely simulate the reinforcement global behaviour in the chases, i.e. pull-out of the reinforcement bars with bond from the chases. For reinforcement is only implemented a presumption about its behaviour, namely by the multi-linear working diagram of the reinforcement. Into the calculation is also implemented a presumption about the reinforcement coherence with ambient material (bond-slip relation). The presumption about the reinforcement coherence with ambient environmental, in our case the special reinforcement of a helical shape and GFRP reinforcement, is possible to express on the bases of performed pull out tests at the BUT-FCE in Brno [8],[9].

For description of the physically-mechanical characteristic of materials (brick, mortar, reinforcement) are used the data obtained from the tests. But determination of characteristics for contact behaviour is much more complicated and unfortunately the mathematical calculation is very sensitive on these material properties. Therefore was chosen two levelled method for determination of contact behaviour.

In the first step were identified the properties of 2D contact on unreinforced arch for all types of loading, so to be reach good agreement between the experiment and numerical calculation. Comparison of experiments (dashed line) with mathematical models (full lines) on unreinforced vaults loaded asymmetrically in ¼ of the span is show on following

diagram (**Fig. 8**). In the second step then the reinforced arches were modelled with 2D contact parameters which were identified in first step. The comparison of models with experiments performed on vaults strengthened by GFRP and loaded asymmetrically in ¼ of the span is show in **Fig. 9** and **Fig. 10**.

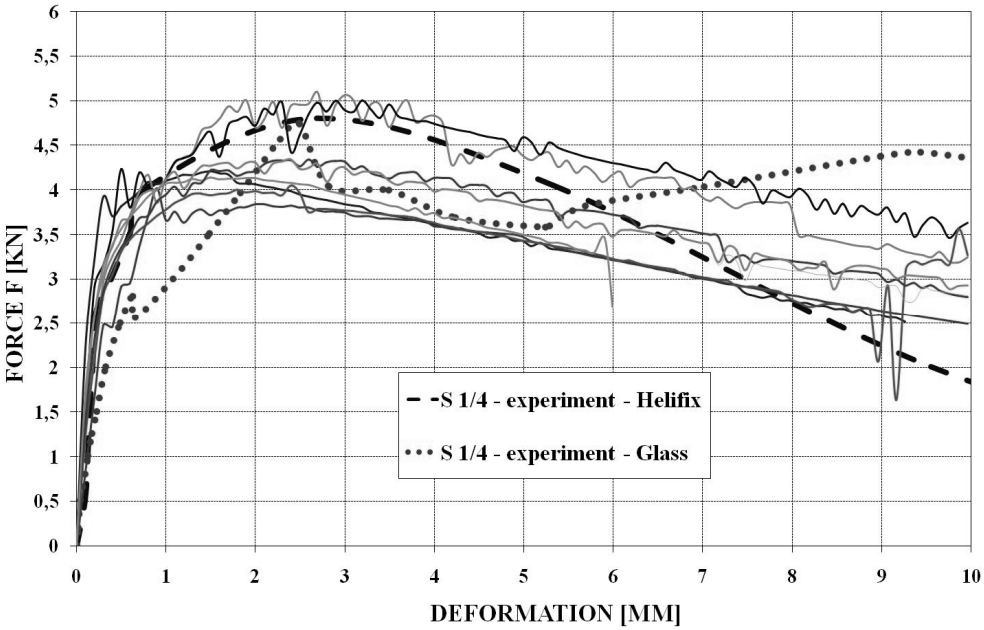

Fig. 8 Comparison of mathematical models with experiments - nonstrengthened vault loaded in ¼ of the span – 2K1 (the 1st experimental result was obtained from series, where was for strengthening used reinforcement Helifix and the 2nd from series, where was for strengthening used reinforcement GFRP)

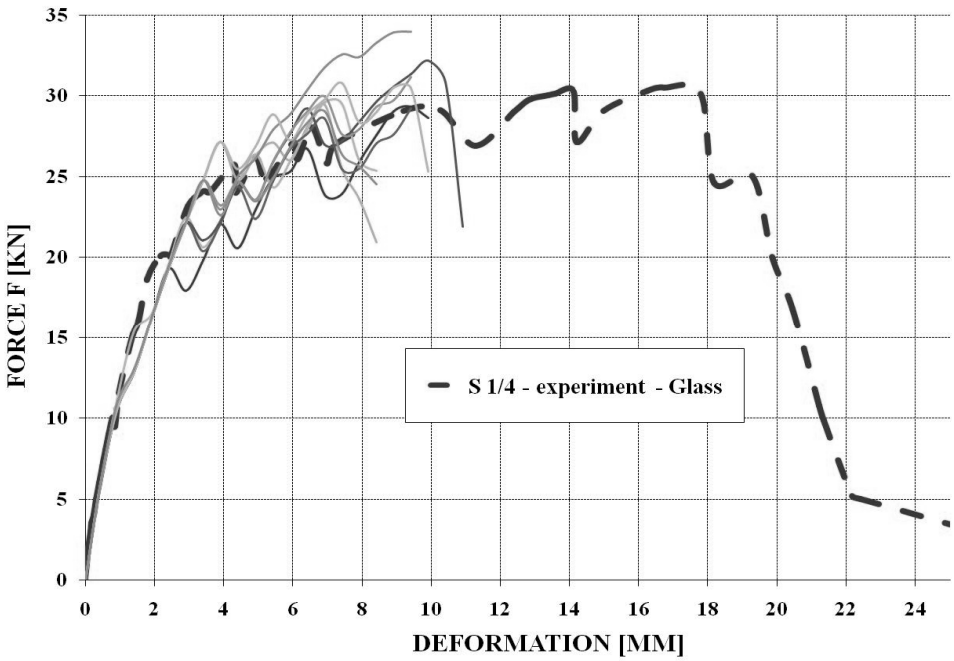

Fig. 9 Comparison of mathematical models with experiments - strengthened vault with two chases with GFRP reinforcement loaded in ¼ of the span – 2K2

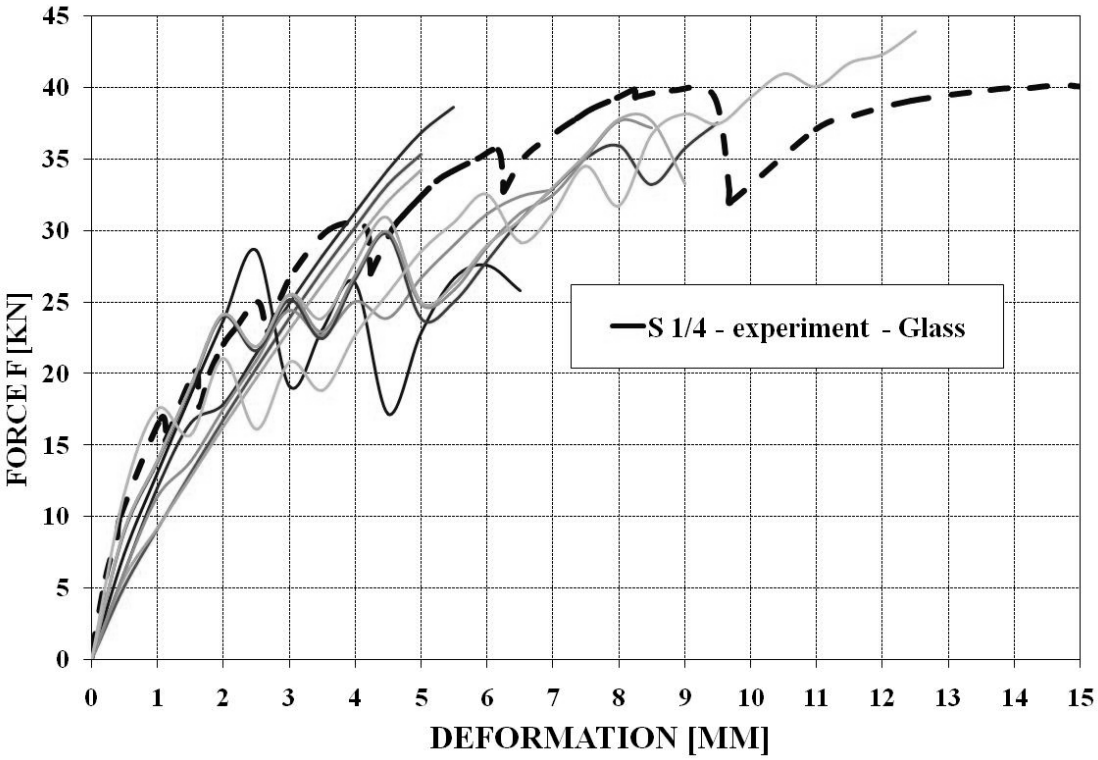

Fig. 10 Comparison of mathematical models with experiments - strengthened vault with three chases with GFRP reinforcement loaded in ¼ of the span – 2K3

Appearance to shapes variety of vaulted masonry construction is this way optimal for investigation of these structures. Mathematical simulation is also suitable for investigation of backfill influence on load-bearing capacity of strengthened masonry vaults (**Fig. 11**, **Fig. 12**).

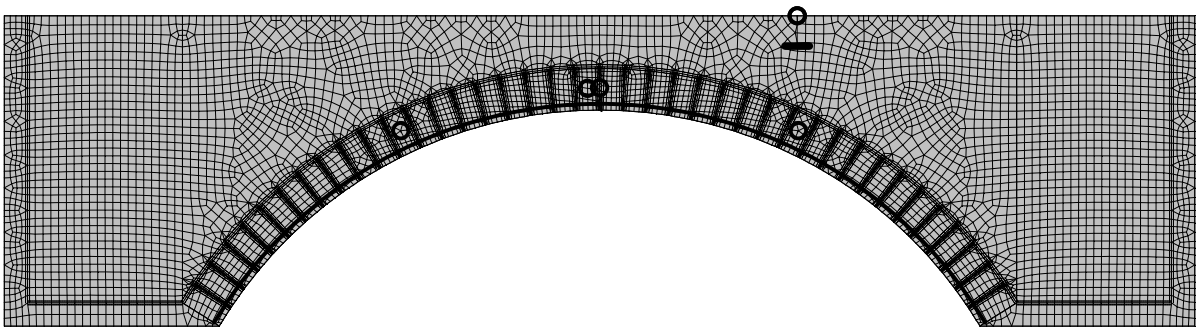

Fig. 11 Mathematical detailed micro-model of masonry vault with backfill – simulation of tested shape of vaults (span 2.6 m, deflection 0.75 m)

a)

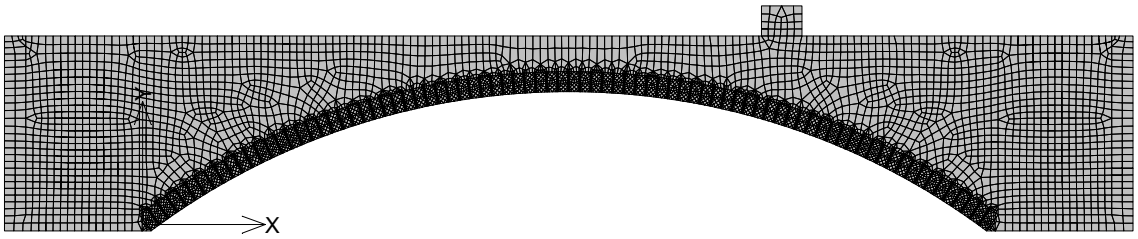

b)

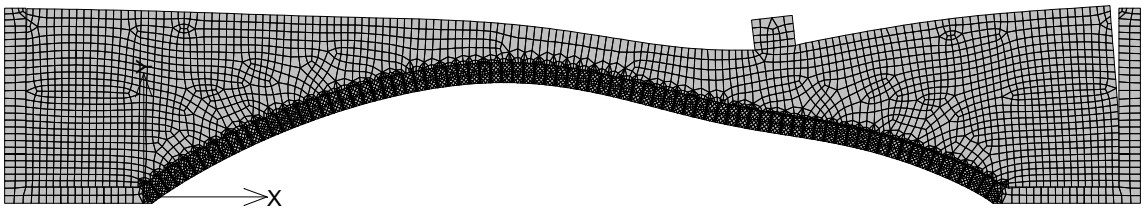

Fig. 12 Mathematical detailed micro-model of masonry vault with backfill - simulation of real construction (span 6 m, deflection 1 m)
a) undistorted shape, b) deformed shape

6 Design algorithm

At present there is no simple normative basis for design of additionally inserted reinforcement for strengthening and/or stiffening of the masonry structures. Some of possibilities of the calculation and design of the masonry reinforced constructions are introduced in

- EC6: Design of masonry structures - Part 1-1: Common rules for reinforced and unreinforced masonry structures,
- ČSN 731101: „Designing of masonry structures”,
- ČSN 731102: „Designing horizontal carrying construction from brick blocks”.

6.1 General presumptions

For proposal and checking calculation of additional reinforcing of the masonry by non-prestressed reinforcement in the area with tensioned reinforcement and compressed masonry was designed computational algorithm, which is based on the following presumptions (**Fig. 13**)

- masonry is loaded by combination of bending moment and compressive force and the algorithm is computed only in areas with tensioned reinforcement,
- masonry and mortar do not transfer tension stress,
- strain of the layers in a cross section is directly proportional to the distance of the layers from neutral axes of the cross section,
- largest strain of the layers of the individual materials is achieved at accomplishment at least the one from the following values:
- limit strain ε_{kc} in compressed masonry,
- limit strain ε_{st} in tensioned reinforcement,

- stress in the compressed area of masonry is determined from idealised elastic-plastic diagram expressing the masonry stress and strain dependence; alternatively may be determined providing that the stress in masonry is equal to the compressive strength of masonry and is equally distributed along the height which is equal to 80% of neutral axes distance from extremely stressed layers of the masonry in the cross section, as it is used in designed algorithm,
- stress in reinforcement is determined on the base of idealized elastic-plastic diagram expressing the stress and strain dependence of reinforcement (**Fig. 14**).

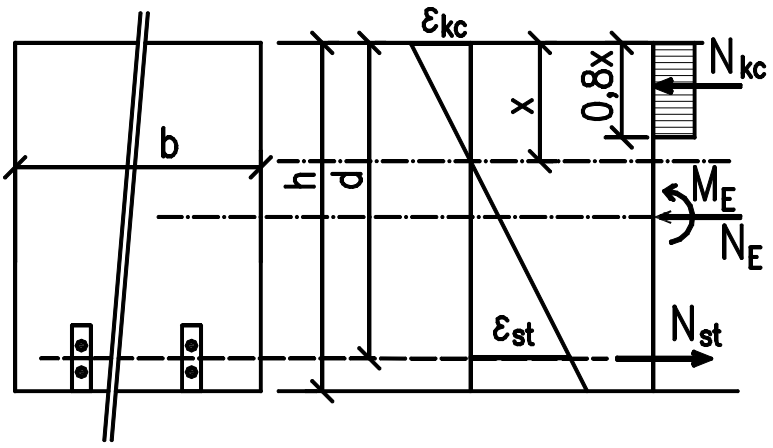

Fig. 13 Presumptions of limit strain method

6.2 Comparison of experiments with designed algorithm

For calculation of the cross section carrying-capacity is used designed algorithm based on above mentioned presumptions. The material characteristics were examined in the course of the tests. The behaviour of the materials is elastic-plastic and it is governed by the idealised working diagrams.

For determination of the characteristic compressive strength of masonry may be used calculation according to EC6

$$f_k = K \cdot f_b^{0,7} \cdot f_m^{0,3} \quad [MPa] \tag{2}$$

where

f_k……characteristic compressive strength of masonry,
f_b……compressive strength of masonry units (mean value),
f_m……compressive strength of common mortar (mean value),
K……constant according to EC6

For the comparison of algorithm with the experiments is used a mean value of the compressive strength of masonry, which is determined on the presumption of normal distribution of a quantity with standard deviation σ=2 (3).

Than

$$f_k^{'} = (1{,}645 + \sigma) + f_k \quad [MPa] \tag{3}$$

where

f_k‘…...mean value of compressive strength of masonry.

At fulfilment conditions of equilibrium in a cross-section, then

$$N_{Ed} = N_{Rd} = N_{kc} - N_{st} \quad and \quad M_{Ed} = M_{Rd} = N_{kc} \cdot z_{kc} + N_{st} \cdot z_{st} \tag{4,5}$$

where

N_{kc}……force in compressed masonry $N_{kc} = f'_{kc} \cdot b \cdot 0{,}8x$,

N_{st}…….force in tensioned reinforcement $N_{st} = A_{st} \cdot \varepsilon_{st} \cdot E_s$,

z_{kc}, z_{st}…relevant arm of internal forces,

the results presented in Table 1 were obtained with the following input values

- cross sectional area of tensioned reinforcement A_{st}= 38,2 mm^2 for vaults jK2, and A_{st}= 57,3 mm^2 for vaults jK3,
- reinforcement modulus of elasticity E_s= 50 GPa,
- mean value of compressive strength of masonry f_k’= 6,6 MPa.

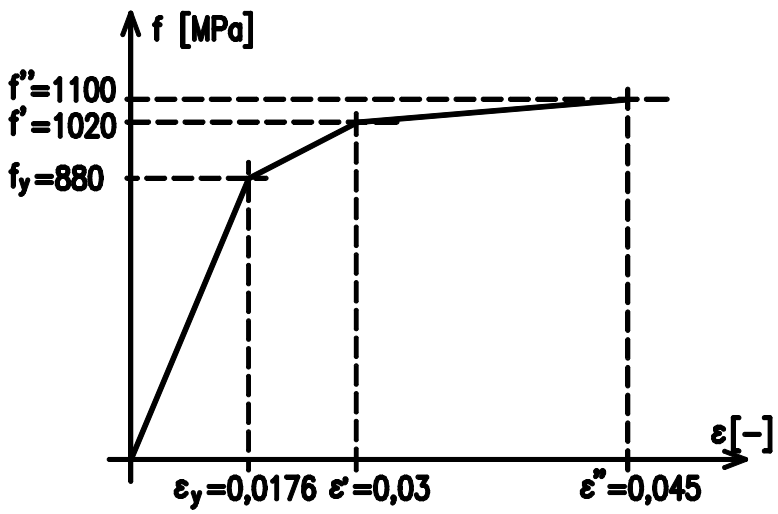

Fig. 14 Trilinear stress-strain diagram of reinforcement

Tab. 1 Comparison of designed algorithm with experiments – achieved calculation values for Helifix reinforcement

Vault nr.	M_{Rd}=M_{Ed} kNm	N_{Rd}=N_{Ed} kN	ε_{st}	σ_{st} MPa	x m	ε_{kc}
1K2	4,7	-19,7	0,0169	845	0,0110	-0,002
1K3	6,2	-25,8	0,0153	762,5	0,0148	-0,002
2K2	4,3	-10,7	0,0176	878	0,0077	-0,001
2K3	6	-15,5	0,0174	869	0,0139	-0,003
3K2	15,1	-316,4	0,0144	717,5	0,0731	-0,028
3K3	17,9	-375,7	0,0138	690	0,0767	-0,032

Annotation: For vault 3K3 was suppos increasing of compressive strength of masonry to 7,6 MPa

7 Conclusions

The method of repairs and strengthening of the masonry vaulted bridges and structures using additionally inserted reinforcement have a wide usage. Its application is possible in the cases when in a structure either originates or may originate the tension stresses in unreinforced masonry, whose magnitude is close (or exceeds) to the strength of unreinforced masonry, i.e. in places where the cracks on a construction have been already developed, alternatively when their origin is expected, whereas it may dealt with the strength of masonry in plain tension, in tension in bending or in main tension.

From the experiments is evident influence of the reinforcement on load bearing capacity of the structure, namely in the case of concentrate loading, asymmetrically loading or in the case of the damaged structures, i.e. cracks, degraded materials, overloading or support movement. In the case of undamaged, uniformly loaded structures without cracks is influence of this type additionally strengthening insignificant.

In the next phase of investigation we will concentrate on mathematical simulation of reinforced and unreinforced vaults in interaction with backfill, which would had prove influence of reinforcing system on carrying - capacity of whole construction (vault/backfill). For comparison of backfill interaction with masonry vault and influence of strengthening will be except experimentally tested vaults also simulated vaults with other shape and proportions.

This contribution has been prepared with the financial support of the Ministry of Education, Youth and Sports, project No. 1M680470001, within activities of the CIDEAS research centre. The theoretical results were gained from the project GA CR 103/08/1658 – "Advanced optimization of designing of composite concrete constructions" and from a project of the Ministry of industry and trade No. 1HPK2/57 – "New generation of durable structures with increased resistance against aggressive actions". The experiments were performed under the sponsor supports of firms Helifix UK, Helifix CZ and Sika CZ.

8 References

[1] Report from the laboratory test of a masonry bridge, Transport Research Laboratory in London, Helifix, 2000, England

[2] Štěpánek, P., Zlámal, M. *Strengthening of masonry vaults* , Proceeding "QUALITY and RELIABILITY in BUILDING INDUSTRY", International Scientific Conference LEVOČA, 17-19. October 2006, Levoča, Slovak republic, p. 423-428, ISBN 80-8073-594-8

[3] Štěpánek, P., Zlámal, M. *Additional strengthening of masonry vaults with non-prestressed additional reinforcement*, Proceeding "STRUCTURAL FAULTS + REPAIR-2006", 13th - 15th June 2006 Edinburgh, Scotland, ISBN 0-947644-59-8

[4] Štěpánek, P., Zlámal, M., Filip, M. *Masonry structures with an additional reinforcement*, Proceeding "10th International Conference on INSPECTION, APPRAISAL, REPAIRS AND MAINTENANCE OF STRUCTURES", 24-26th October 2006, Eaton Hotel, Kowloon, Hong Kong SAR, CHINA, ISBN: 981-05-5562-8

[5] Rots, J, *Structural Masonry – An Experimental/Numerical Basis for Practical Design Rules*, Balkema, Rotterdam (1997)

[6] Lourenco, P.B. *Computational Strategies for Masonry Structures*, Delft University Press, (1996)

[7] Červenka, V., Jendele, L. *ATENA Program Documentation*, Theory and User's manual for Atena 2D, Prague, Feb. 5, 2004

[8] Štěpánek, P. et al. *Strengthening of Masonry Structures by HELIFIX System. Report on tests carried out in 2002*. Contractor HELIFIX CZ, Ústí nad Labem, Brno University of Technology, Faculty of Civil Engineering, Dept. of Concrete and Masonry structures, Brno May 2003

[9] Horák, D.; Zlámal, M.; Štěpánek, P.; Fojtl, J. *Fibre Reinforced Concrete: Interaction between GFRP Reinforcement and Concrete*. In Harnessing Fibres for Concrete Construction. Bracknell, IHS BRE Press. 2008. p. 75 - 86. ISBN 978-1-84806-042-5.