NEW POSSIBILITIES OF INCREASING RESISTANCE OF WOOD BEAMED CEILINGS

David HORAK
Brno University of Technology – Faculty of Civil Engineering, Czech Republic, horak.d@fce.vutbr.cz

Ivana SVARICKOVA
Brno University of Technology – Faculty of Civil Engineering, Czech Republic, svarickova.i@fce.vutbr.cz

Summary

Renovation of the wooden beamed ceilings coupled with concrete slab is one of the most common methods of remediation, which has its advantages and disadvantages

This paper describes the experiments done at BUT years 2010 and 2012. The aim of the research was to verify the bearing capacity of laminated wooden beams fitted with carbon lamella. Influence of such a reinforcing was observed as well as differences in behaviour of the beams. These tests were performed using the wooden beams themselves, as well as wooden beams coupled with reinforced concrete slab. With respect to the lifespan of the structure the possibility of the use of composite shear keys was verified instead of the standard steel nails.

Keywords: FRP shear connector, laminated wood, CFRP lamella, experiment

1 Introduction

One of the very often used methods for the rehabilitation of wooden beam-based ceilings is the reinforcing using wood-concrete floor system. Undisputed advantage is the stiffening of the structure in the horizontal plane and exploiting of good compressive material characteristics of concrete. Tensile forces are transferred through the wooden part of such composite cross-section. The wooden part of the section is often the limiting factor concerning the total bearing capacity. Therefore there is an area of question, whether it is possible to "enhance" the wooden part and increase the bearing capacity of the system.

To increase the bearing capacity of the cross-section it is possible to insert a material with higher tensile strength (steel, GFRP and CFRP materials) in the zone where tensile stresses emerge – this method work not only for the wooden structures but it is applicable generally [2]. This is possible to achieve by additional bonding of such material into a groove or adding the material during the production of the glued wooden beams. This technique was used as the lamella was inserted into the most bottom joint (i.e. located in the tensile zone, see **Fig. 1**)

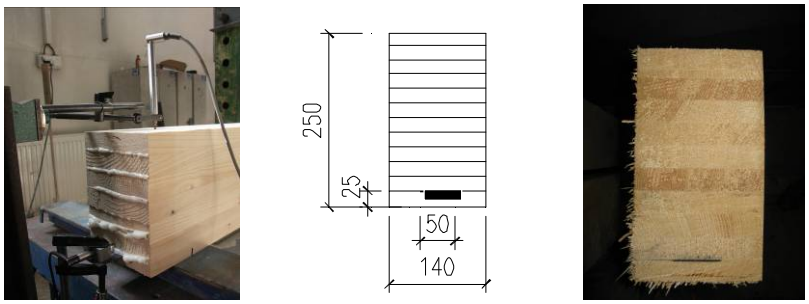

Fig. 1 *Test specimen made of laminated wood with glued-in lamella*

2 Pull-out test

Carbon lamellas are usually glued by two-component epoxy with various additives. When inserting the lamella into the milled out groove in the wooden plate it is necessary to consider some specific requirements related to the manufacturing process. It has to provide good cohesion to ensure functionality and also it has to allow simple application. To meet these requirements the technology and modification of the wooden plates were consulted with the producer of the glued wooden beams.

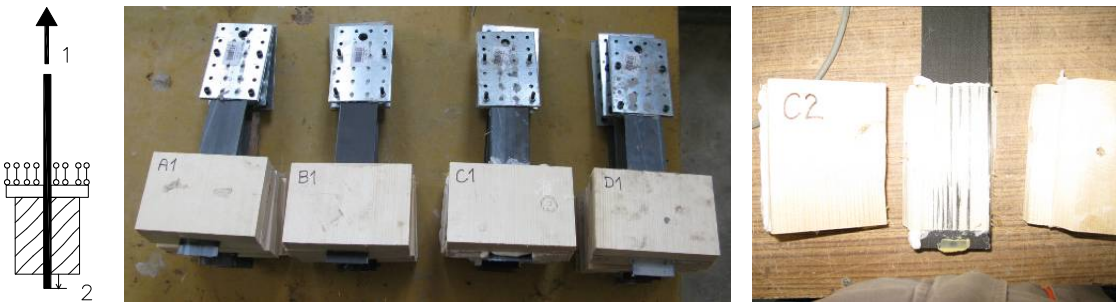

Fig. 2 *Test specimen made of laminated wood with glued-in lamella*

With regard to results (**Fig. 2**) of four testes glues the PUR-based glue was chosen. This glue is commonly used in production of glued beams.

3 Loading of wooden beams

The aim of the experiments was to observe the influence of the reinforcement made of carbon lamella placed into laminated wood cross-section. The test was performed on one beam made of wood, one beam made of glued wood and three beams made of glued wood reinforced with CFRP lamella. Dimensions of test specimens were $150 \times 250 \times 3500$ mm. Four point bending test was applied. The loading force, deflections of the beam, strain in the lamella and the slip of the lamella's ends were measured.

It was observed during the experiments that the effect of the reinforcing is neglected as a result of the beam coming unglued (poorly produced specimens, see **Fig. 3**)

Fig. 3 *Failure of the specimen with low quality production (low cohesion between lamella and surrounding wood)*

Fig. 4 *Failure of the specimen with good quality production (high cohesion between wood and lamella)*

If the quality of the glued beam is ensured (i.e. there is good cohesion between wooden plates and lamella) the failure mode is similar to wooden beam (**Fig. 4**) and the increase of loading capacity can be more than 60 % in comparison with the beam without reinforcement (**Fig. 5**).

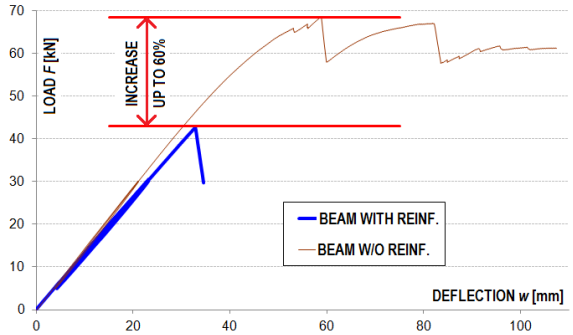

Fig. 5 *L-D diagrams of the beams with and without reinforcement*

4 Design of the shear connectors

The second part of the experiment was prepared using the beams coupled with concrete slab. New possibilities as how to use different type of connectors were examined. Four types were tested: steel nails, GFRP bars with diameter 10 mm and fibreglass grating with various orientation. The best substitute for steel connectors (nails) proved to be GFRP bars glued into the wooden beam.

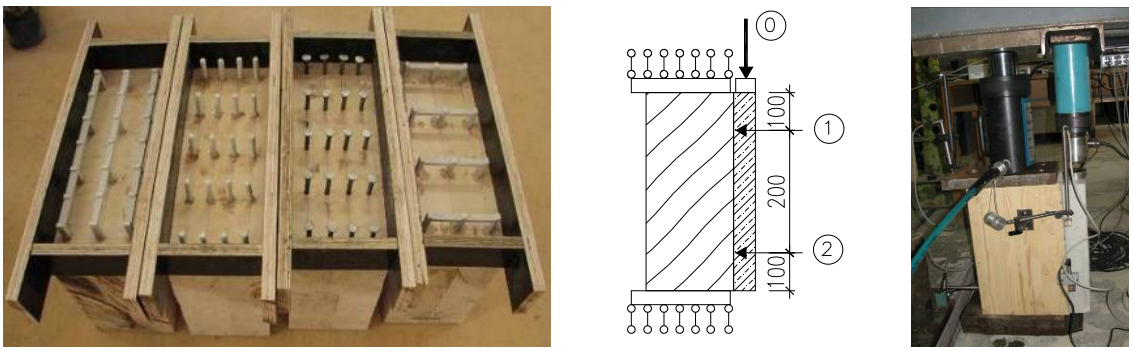

Fig. 6 *Test of the shear connectors*

5 Testing of wooden beams with concrete slab

The aim of this test was to verify the benefits of reinforcing wooden beams coupled with a concrete slab and consider the ratio between the contribution to bearing capacity and the increasing costs of the beams.

Fig. 7 *Failure of the specimen located into the glued joint*

Fig. 8 *Loading of wood-concrete specimen*

While the beams with poor quality production the increase of bearing capacity was negligible (**Fig. 7**) the beams with proper mechanical behaviour (**Fig. 8**) showed up to 55 % increase.

6 Conclusions

Test results indicate that gluing of a lamella into the laminated wood cross-section enables to significantly increase the bearing capacity up to 60 % of the original strength. The increase of the bearing capacity depends on the quality of the production and the cohesion between single wooden plates above all – if the failure mode is located in the joints between plates it is not possible to exploit tensile properties of CFRP (or any other) material.

The tests also proved the ability to safely use composite shear connectors made of FRP bars instead of steel nails even though its application is more labour demanding. In specific circumstances it is a alternative to steel couplings. When designing this kind of connection it is necessary to keep in mind this connection is slightly softer. This is caused by imprinting of the connectors which is the opposite behaviour to the steel nails.

Acknowledgement

The tests were performed as part of the research project P104/10/2153 – Composite structures based on high performance silicates and wood – environment based optimisation and experimental verification.

References

[1] HORÁK, D.; ŠVAŘÍČKOVÁ, I.; ŽÍTT, P.; ŠTĚPÁNEK, P. *Experimetální ověření únosnosti dřevobetonových spřažených trámů zesílených CFRP lamelami*. In 19. Betonářské dny 2012. Hradec Králové, ČBS Servis, s.r.o. 2012. p. 342–347. ISBN 978-80-87158-32-6.

[2] ZLÁMAL, M.; ŠTĚPÁNEK, P. Strengthening of masonry vaulted structures. In CESB 10 – Central Europe towards, sustainable buildings from theory to practise. Praha, Fakulta stavební, ČVUT. 2010. p. 221–1056. ISBN 978-80-247-3624-2.