MODELING OF RC PRECAST COMPOSITE BEAMS MADE OF RECYCLED AGGREGATE CONCRETE STRENGTHENED BY HSC INSERTS

Robert GRYGO
Bialystok University of Technology , Poland, r.grygo@pb.edu.pl

Andrzej LAPKO
Bialystok University of Technology, Poland, lapko@pb.edu.pl

Tadeusz CHYZY
Bialystok University of Technology, Poland, teddy@pb.bialystok.pl

Summary

The application of concrete waste for recycled aggregate concrete (RAC) used in structural members is associated with an increased risk for the structure. RAC may have reduced compressive and tensile strength, modulus of elasticity, increased shrinkage and creep. Therefore a new concept of construction of structural members made of RAC was elaborated and presented in the paper. This concept is based on precast concrete strengthening inserts made of HSC, located in the most stressed compression zone of the members made of RAC. The paper will present the results of experimental and numerical (FEM) analysis carried out on such composite beams. The results of experimental studies as well as numerical simulations using Diana computer program, performed for the tested beams, reveal some positive effects, such as more higher flexural capacity and stiffness of the composite beams compared to the reference homogenous beams.

Keywords: RC composite beams, recycled aggregate concrete, high performance concrete, flexural capacity

1 Introduction

The research of structural members made of concrete with recycled aggregate (RAC) were conducted from the 90s in many countries. Switzerland was the first country with the normalized standards of the use of RAC. In Osnabruck, Germany was built the first apartment building constructed with the recycled aggregate concrete. In Poland the most extensive research in this area were conducted in past by Ajdukiewicz and Kliszczewicz [1] and recently by the research team from Bialystok University of Technology [2].

The previous studies conducted by e.g. Xiao and Zhang [3] and other authors showed that the application of concrete waste for recycled aggregate concrete (RAC) confirmed some significant differences in the behavior of structural elements made of RAC compared to members totally made of natural aggregate. The beams made of RAC cracked earlier and showed greater deflections at comparable loads.

The previous studies shows that the use of RAC in structural members is associated with an increased risk for the building structures.

To avoid such risks for the structural behavior the authors proposed an innovative solution for construction flexural members made of RAC prepared with an inclusion (being a kind of inserts) made of High Strength Concrete and located in the most compression zone. The paper describes experimental and numerical study on the structural behavior of such innovative constructions on the basis of flexural tests of model RC beams.

2 Experimental studies of an innovative RC beams made of RAC

The concept is based on a application of precast concrete strengthening inserts made of HSC (with compressive strength f_{ck} ~ 100 MPa) and composed with the recycling aggregate concrete in the most stressed compression zone of the member (see Fig.1).

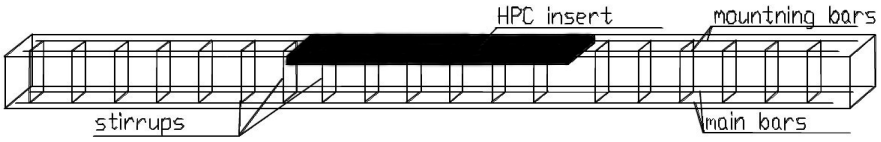

Fig. 1 *Schematic concept of a reinforcement of a beam with the insert made of HSC*

Several series of prototype model beams made from recycled aggregate (RAC) with the HSC inclusions were tested, e.g. model beams and beams in semi – technical scale with a span of 3,0 m. In this paper the results only from model beam tests are presented.

The model beams were tested as simply supported for flexure in the testing machine (see Fig.2). During the short time tests the deflections and concrete strains in the beams were measured and also the cracking behavior (the set and the crack widths) of the beams has been registered. Three series of RC model beams were prepared with the effective span 1050 mm and the cross-section 80 x 120 mm. For comparison, there were tested reference homogenous beams type N (made of concrete with natural aggregate) and type R (made of recycling aggregate concrete). Also the reference beams made of HSC with the natural basalt aggregate were prepared and tested in the same way. The view of tested innovative beams is presented in the Fig. 2.

Fig. 2 *View of tested beam with HSC insert: a) – test stand, b) – the set of cracks after the failure*

The table 1 presents the values of average deflections registered for the model beams of Series 3 with the reinforcement ratio 2,0 % for the chosen levels of loading forces.

Tab. 1 *Values of beam deflections f [mm] of model beams*

Force F[kN]	Beam deflections *f* for series 3[mm]			
	S3-R	**S3-N**	**S3-RH**	**S3-H**
10	1,38	1,11	0,98	0,33
20	3,26	2,75	2,14	1,05
30	5,35	4,72	3,72	2,35
40	-	-	5,37	3,53
50	-	-	7,23	4,88

The comparison of mean values of flexural capacity of all the tested beams (see table 1) shows that the critical forces obtained for the beams S-3R and S-3N were almost equal. Whereas the innovative beams S3-RH (with the HSC inserts) revealed the flexural capacity about 32 % higher than for the reference beams S3-R and S3-N and almost equal to the values obtained for the reference beam S-3H.

3 Numerical FEM analysis

FEM analysis was elaborated for a numerical nonlinear model of beam with dimensions shown in Fig. 3. The two calculation variants were analysed: for variant I – flexural reinforcement of the beam was made of 3 bars ø 6, for variant II – flexural reinforcement of the model beams was made of 3 bars ø 10. FEM discretization scheme of the analysed RC beam made of RAC with the HPC instert used for numerical tests is presented in Fig.2.

The calculations were carried out using computer program DIANA. In the numerical tests a Newton-Raphson algorithms, assuming 5% increase of load in 20 steps were used.

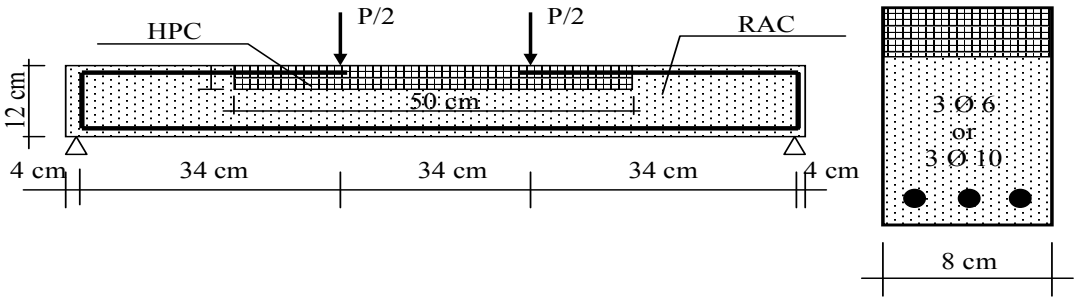

Fig. 3 *The numerical scheme of model beams with HSC insert*

For the FEM analysis, the adopted material properties are given in table 2.

Tab. 2 *Assumed concrete properties of model beams used in FEM analysis*

Assumed property	Recycling aggregate concrete (RAC)	High Strength Concrete (HSC)
Young modulus E_{cm}	30 GPa	43,6 GPa
Tensile strength f_{ctm}	2,2 MPa	5,0 MPa
Compression strength f_{cm}	28 MPa	98 MPa

In Figures 4 and 5 there are presented the Results of FEM analysis in the form of diagrams of the beam deflections (vertical axis) versus load factors (horizontal axis) in half span of

the beams loaded numerically till to failure. Maximum load in scenario I was assumed P = 60 kN and for scenario II – P = 120 kN.

FEM analyses of the tested structures shows that the beam with HPC insert has a greater flexural capacity compared to the beam made of RAC.

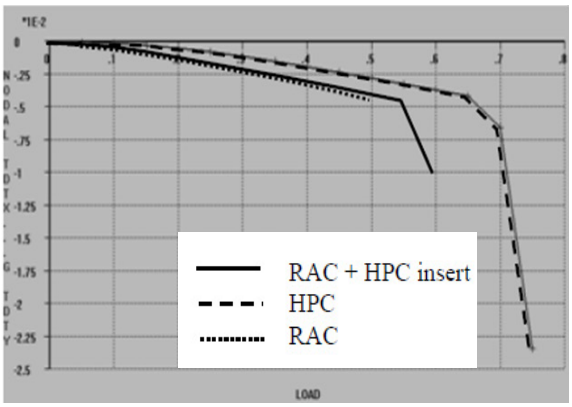

Fig. 4 *Diagram of beam deflections (variant I)*

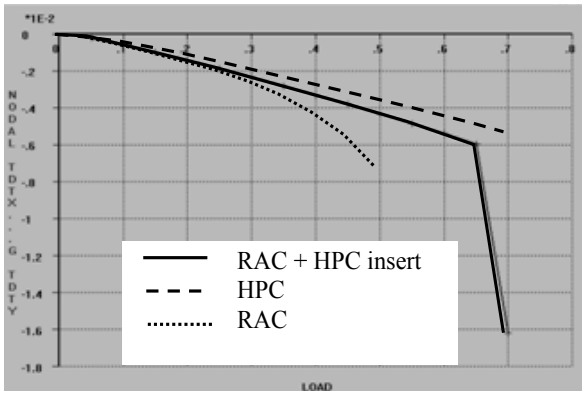

Fig. 5 *Diagrams of beam deflections (variant II)*

4 Conclusions

The experimental and numerical FEM analyses conducted on reinforced concrete composite beams made of recycled aggregate concrete with an insert made of High Strength Concrete revealed various positive effects of strengthening compared to homogenous beams totally made of recycled aggregate concrete.

The analyses showed also the possibility of applications of such concept of strengthening the structural concrete members in rehabilitation and reconstruction works.

Acknowledgement

The authors are grateful for the financial support provided for the National Centre of Research and Development (NCBR) in the frame of Grant NCBiR NR04-0012-10/2010.

References

[1] AJDUKIEWICZ, A., KLISZCZEWICZ, A. *Comparative tests of beams and columns made of recycled aggregate concrete and natural aggregate concrete*. Journal of Advanced Concrete Technology, Vol.5, No.2, 259–273, June 2007, pp.259–273.

[2] LAPKO, A., GRYGO, R. *Long term deformations of recycled aggregate concrete (RAC) beams made of recycled concrete.* Modern building materials, structures and techniques : the 10th international conference, Vilnius, Lithuania (2010), pp.178–186.

[3] XIAO, J., LIA, J., ZHANG, CH. *Mechanical properties of recycled aggregate concrete under uniaxial loading.* Cement and Concrete Research, Vol. 35 2005, pp. 1187–1194.